PHVB1617

IP68 | IK08 | 24V | 5 YR WARRANTY

hawko lighting
By FOS Lighting

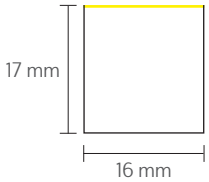

Key Features

- Minimum bend diameter - 300mm
- Ambient working temperature: (-)40°C to (+)55°C
- Bending Direction - Vertical
- Cut Length (Monochrome) - 55.6mm
- Cut Length (Tunable white) - 83.3mm
- Cut Length (Dim to Warm) - 62.5mm
- Cut Length (RGB / RGBW) - 83.3mm
- SPI Pixel Light options available on request

Connectors

Direct Entry (DE)

Left Side Entry (SL)

Right Side Entry (SR)

Bottom Entry (BE)

Mounting Accessories

Aluminium Profile

Flange Aluminium

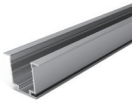

Serrated Aluminium

Flange Serrated Aluminium

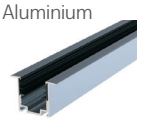

Bendable Serrated Aluminium

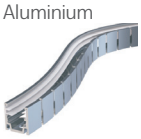

Pivot Bracket

Rotary Locking

Wall Mount

Recessed

Pendant Wire

Pendant Rod

Accessory Dimensions

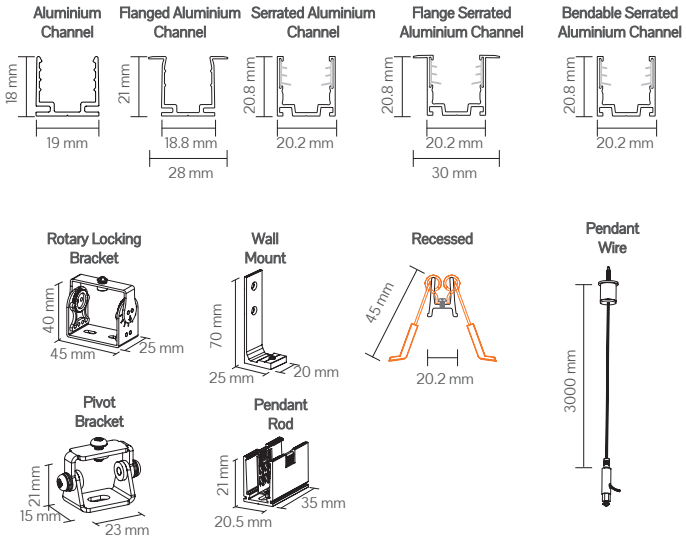

Code

Example: PHVB1617 - 068022DEDO - 2400

Code	Wattage (W/m)		CRI		CCT		lm/m	Connector		Driver		Length
PHVB1617	06	6	80	CRI>80	22	2200K	450	DE	Direct Entry	DO	Non-Dim	-xxxx
	09	9	90	CRI>90###	27	2700K	465	SL	Left side entry	DA	DALI	
	12	12			30	3000K	465	SR	Right side entry	CA	Casambi	
	15	15			35	3500K	580	BE	Bottom Entry	SW	Switch Dim	
					40	4000K	580			PH	Phase Dim	
					57	5700K	580			RC	2.4Ghz Remote Control	
					TW	2200K-5700K						
					DW	1800K-3000K						
					RGB	RGB						
					R2	RGBW (2700K)						
					R3	RGBW (3000K)						
					R4	RGBW (4000K)						

Lumen/m figures based on, 12W, CRI>80. ## FOS Lighting reserve the right to change any data without notification. ### CRI>90 only in 12W/m in 2700K, 3000K, 3500K, 4000K